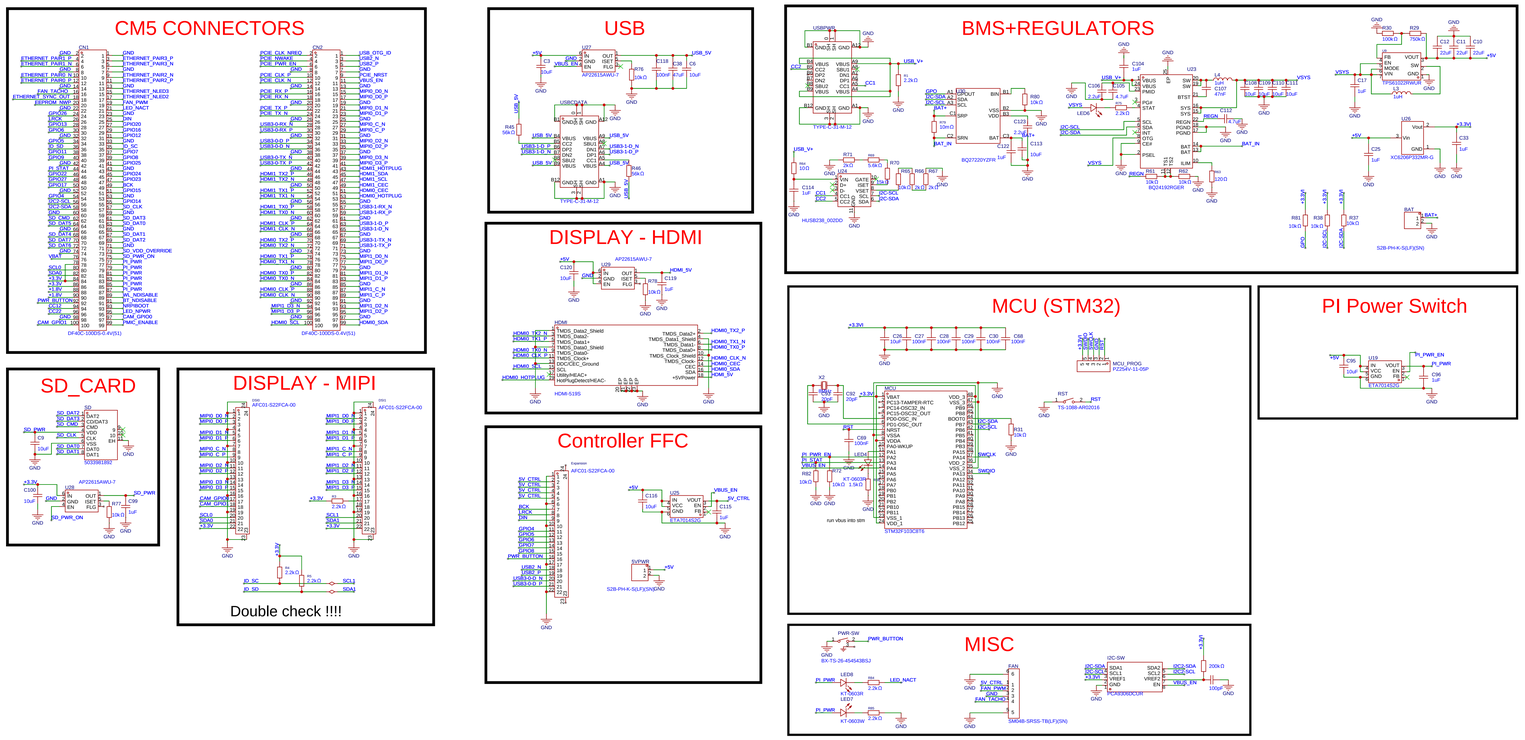

Schematic	Schematic1	Update Date	2025-09-23
		Create Date	2025-08-20
Page	P1	Part Number	
Drawn	Modular Motherboard CM5		
Reviewed			
	VER	SIZE	PAGE 1 OF 1
EasyEDA	V1.0	A4	EasyEDA.com